(19)

(12)

(10)
(45)

(21) 202021285947 .9

(22) 2020 .07 .05

(73)
265500
16

(72)

(51) Int .Cl .
B66F 9/06 (2006 .01)
B66F 9/075 (2006 .01)
B66F 9/08 (2006 .01)
B66F 9/22 (2006 .01)
B66F 17/00 (2006 .01)

(54)

(57)

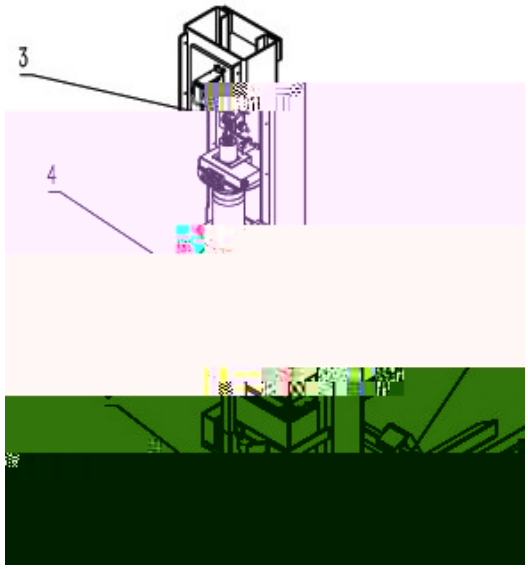

1 .

[0001]

[0002]

[0003]

° ţ я

[0012]

[0013]

[0014] ZigBee

[0015]

[0016]

[0017]

[0018] 1

[0019] 2

[0020] 3

[0021] [002 Ů

[002 ƀ Ð א

[0 ⅋ ľ

4 4

2 8 2 10

8 , ϒχ 10 ʁ ΐ 2 1 ϑ ϭ υÅ Ч μ ʳ 2 υ Ş υ 0 щ

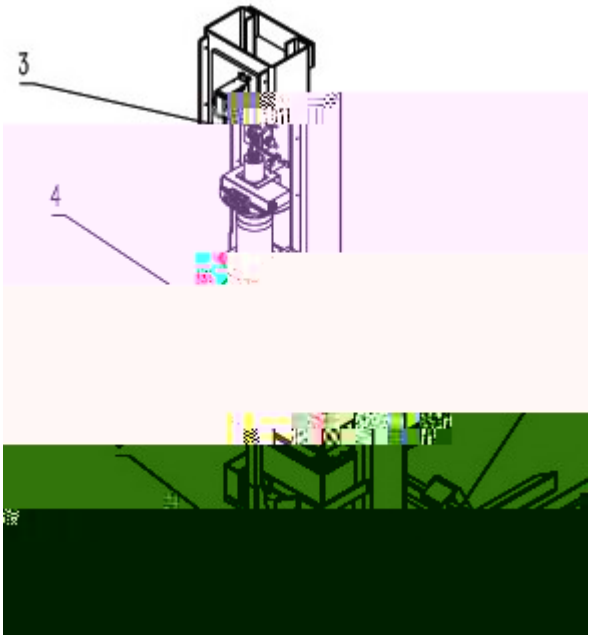

1

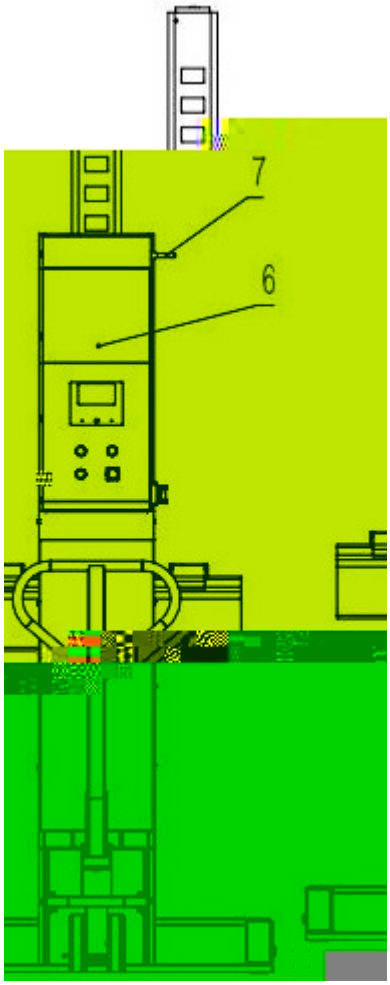

2

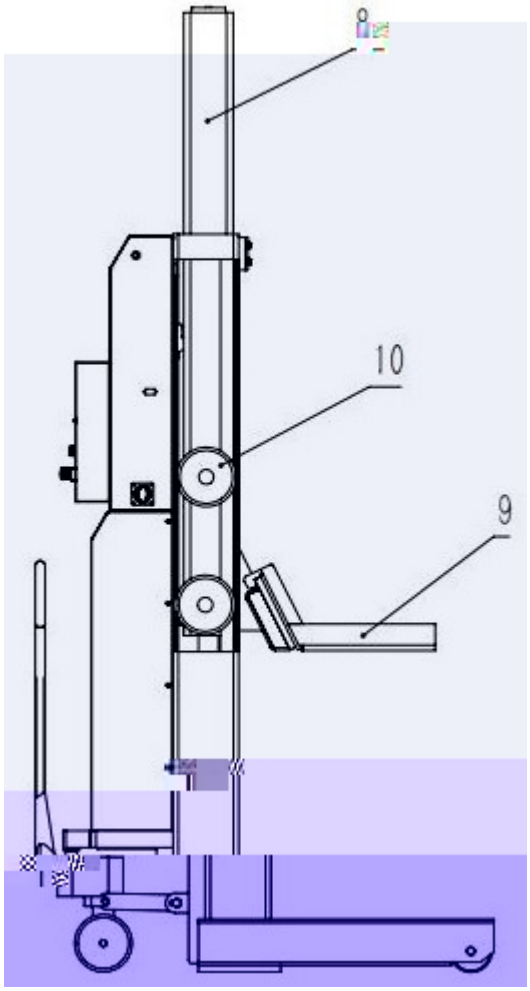

3